Tablo 1
Table 1

Dil Kodu Cam Code	CC	h	L
1005	05	0	25
1006	06	3	24
1008	08	0	31
1010	10	0	73
1016	16	32	45
1019	19	-3	39
1020	20	0	40
1021	21	3	39
1022	22	4	39
1023	23	5	39
1024	24	7	38
1026	26	10	37
1035	35	25	35
1040	40	0	45
1437	1437	-7	43
1438	1438	-5	44
1439	1439	-2	45
1141	1141	3	44
1142	1142	2	45
1143	1143	5	44
1144	1144	7	43
1146	1146	6	43

Dil Kodu Cam Code	CC	h	L
1055	55	-10	45
1057	57	-7	47
1058	58	-5	48
1059	59	-3	49
1060	60	0	50
1061	61	3	49
1063	63	5	48
1064	64	7	48
1066	66	10	46
1067	67	12	45
1068	68	14	48
1069	69	-3	53

Dil Kodu Cam Code	CC	h	L
1070	70	0	54
1073	73	5	53
1074	74	7	52
1078	78	18	36
1080	80	0	65
1081	81	3	64
1084	84	7	63
1086	86	10	61
1087	87	12	58
1089	89	36	46
1094	94	24	45
1190	1190	0	95
1118	1118	-14	46
1119	1119	-2	50
1169	1169	16	44
1170	1170	18	42

Pano Kilit Dilleri
Panel Locks Cams

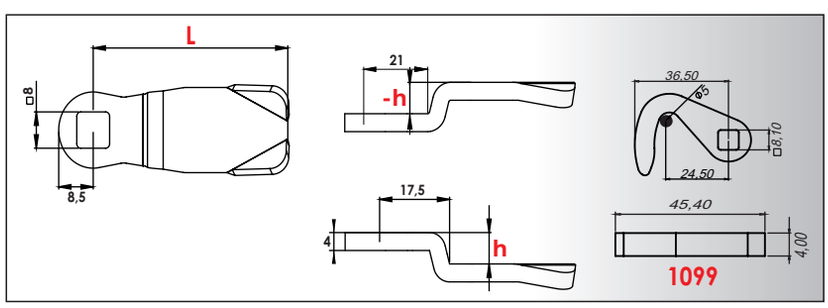

Tablo 2
Table 2

Dil Kodu Cam Code	CC	h	L
1208	1208	0	0
1209	1209	0	0
1210	1210	0	50
1211	1211	3	49
1213	1213	5	49
1214	1214	7	48
1216	1216	10	46
1219	1219	18	48

İspanyolet Diller
Espagnolette Cams

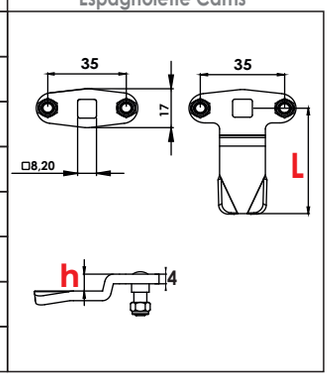

Tablo 3
Table 3

Dil Kodu Cam Code	CC	h	L
1396	1396	4	35
1397	1397	6	35
1398	1398	11	35

Plastik Diller
Polyamide Cams

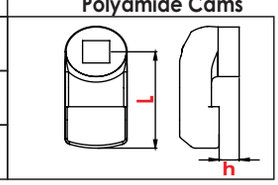

Tablo 5
Table 5

Dil Kodu Cam Code	CC	h	L
1560	1560	0	50
1561	1561	3	49
1563	1563	5	48
1564	1564	7	48
1566	1566	10	46
1567	1567	12	45

Paslanmaz Diller
Stainless Steel Cams

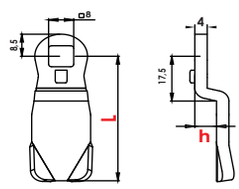

Tablo 6
Table 6

Dil Kodu Cam Code	CC	h	L
2010	10	0	33
2011	11	3	32
2013	13	5	31
2014	14	7	31
2016	16	10	30
2020	20	0	42
2021	21	3	41
2023	23	5	40
2024	24	7	40
2026	26	10	39

KM01 - KM11 - KM21 - KY01 - KP02 Dilleri
KM01 - KM11 - KM21 - KY01 - KP02 Cams

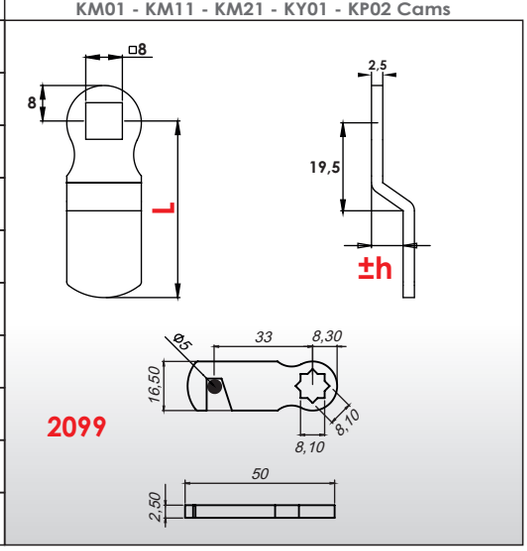

Tablo 7
Table 7

Dil Kodu Cam Code	CC	h	L
3010	10	0	27
3011	11	3	26
3014	14	7	24
3020	20	0	33
3021	21	3	32
3023	23	5	31
3024	24	7	29
3026	26	10	27
3099.L	99.L	0	??

Mini Kilit Dilleri
Mini Lock Cams

